Instructions for the following series products:

EZ-Line™ Horizontal Lifeline System

Model Number 7605060

USER INSTRUCTION MANUAL
EZ-LINE™ HORIZONTAL LIFELINE SYSTEM

This manual is intended to meet the Manufacturer's Instructions as recommended by OSHA and should be used as part of an employee training program.

WARNING: *This product is part of a fall arrest system. These instructions must be provided to the user of this equipment. The user must read and understand these instructions or have them explained to them before using this equipment. The user must read and follow the manufacturer's instructions for each component or part of the complete system. Manufacturer's instructions must be followed for proper use and maintenance of this product. Alterations or misuse of this product or failure to follow instructions may result in serious injury or death*

IMPORTANT: *If you have questions on the use, care, or suitability of this equipment for your application, contact DBI-SALA.*

IMPORTANT: *Before using this equipment, record the product identification information from the ID label into the inspection and maintenance log in section 9 of this manual.*

Figure 1 - Typical EZ-Line™ Horizontal Lifeline System Configuration

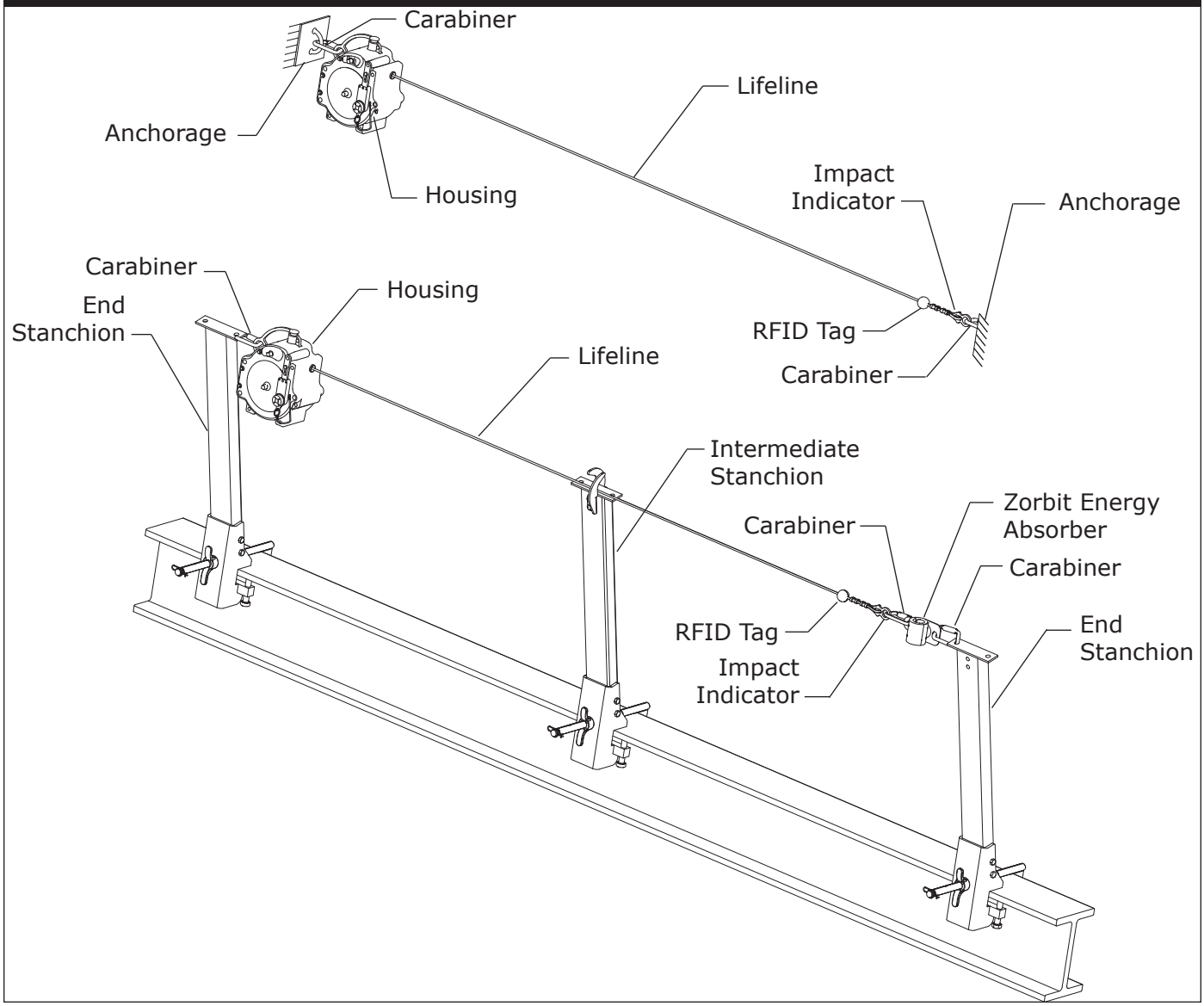

© Copyright 2008, DB Industries, Inc.

DESCRIPTIONS

The EZ-Line™ Horizontal Lifeline System is a temporary horizontal lifeline system that retracts into a housing for easy storage and portability.

1.0 APPLICATIONS

1.1 PURPOSE: The EZ-Line™ Horizontal Lifeline System is designed for use as an anchoring means for one or two personal fall arrest systems (PFAS). Use the EZ-Line™ Horizontal Lifeline (HLL) where horizontal mobility and fall protection are required.

The EZ-Line™ Horizontal Lifeline System can also be used in combination with DBI-SALA stanchions. Up to three spans are then permissible, with up to two users connected to each span.

IMPORTANT: *For multi-span use, the use of a secondary HLL energy absorber -such as a Zorbit Energy Absorber- at the opposite end of the device is mandatory. See Figure 1 for a typical installation*

1.2 LIMITATIONS: Consider the following application limitations before using this equipment:

A. HORIZONTAL LIFELINE SPAN: The maximum horizontal lifeline span length is 60 feet (18.3 m), see Figure 1. The span length must be reduced when clearance is limited. See section 3.2 for clearance information.

B. CAPACITY: For a single span use, the maximum capacity of the EZ-Line™ Horizontal Lifeline System is two persons. For a multi-span use, the maximum capacity of the EZ-Line™ Horizontal Lifeline System is two persons connected to each span. The maximum number of spans is three. The maximum weight of each person, including tools and clothing, is 310 lbs. (141 kg).

C. BODY SUPPORT: The EZ-Line™ Horizontal Lifeline must only be used with personal fall arrest systems incorporating a full body harness.

D. FALL CLEARANCE: There must be sufficient clearance below the worker to arrest a fall before striking the lower level or obstruction. See section 3.2 for required clearance information.

E. FREE FALL: Rig and use the personal fall arrest system such that the maximum potential free fall does not exceed government regulatory and subsystem manufacturer's requirements. See section 3.0 and subsystem manufacturer's instructions for more information.

F. SWING FALLS: Swing falls occur when the anchorage point is not directly overhead. The force of striking an object in a swing fall may cause serious injury or death. Minimize swing falls by working as directly below the anchorage point as possible. Do not permit a swing fall if injury could occur. Swing falls will significantly increase the clearance required when a self retracting lifeline or other variable length connecting subsystem is used. If a swing fall situation exists in your application, contact DBI-SALA before proceeding. See Figure 2.

Figure 2 - Swing Fall Hazard

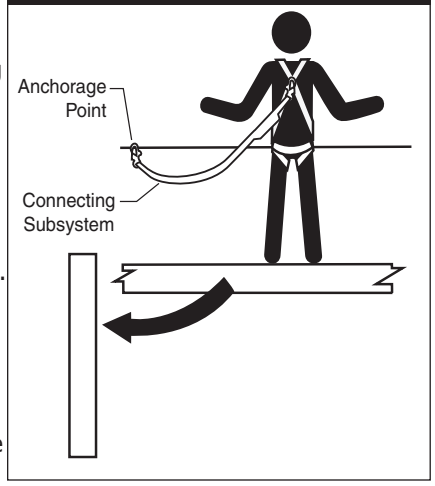

G. CONNECTING SUBSYSTEM: Each person's connecting subsystem must limit fall arrest forces to 900 lbs. (4.0 kN) or less. See section 2.5.

H. ANCHORAGES: The EZ-Line™ Horizontal Lifeline System must be installed on anchorages that meet the requirements specified in section 2.4.

I. ENVIRONMENTAL HAZARDS: Use of this equipment in areas where physical or environmental hazards are present may require additional precautions to reduce the possibility of injury to the user or damage to the equipment. Hazards may include, but are not limited to; high heat, caustic chemicals, corrosive environments, high voltage power lines, explosive or toxic gases, moving machinery, or sharp edges. Contact DBI-SALA if you have questions about using this equipment where physical or environmental hazards exist.

J. TRAINING: This equipment must be installed and used by persons trained in its correct application and use. See section 4.

1.3 APPLICABLE STANDARDS: Refer to national standards, including local, state, and federal (OSHA) requirements for more information on work positioning systems and associated components.

2.0 SYSTEM REQUIREMENTS

2.1 COMPATIBILITY OF CONNECTORS: DBI-SALA equipment is designed for use with DBI-SALA approved components and subsystems only. Substitutions or replacements made with non-approved components or subsystems may jeopardize compatibility of equipment and may effect the safety and reliability of the complete system.

2.2 COMPATIBILITY: Connectors are considered to be compatible with connecting elements when they have been designed to work together in such a way that their sizes and shapes do not cause their gate mechanisms to inadvertently open regardless of how they become oriented. Contact DBI-SALA if you have any questions about compatibility.

Connectors (hooks, carabiners, and D-rings) must be capable of supporting at least 5,000 lbs. (22.2 kN). Connectors must be compatible with the anchorage or other system components. Do not use equipment that is not compatible. Non-compatible connectors may unintentionally disengage. See Figure 3. Connectors must be compatible in size, shape, and strength. Self-locking snap hooks and carabiners are required by ANSI Z359.1 and OSHA.

Figure 3 - Unintentional Disengagement (Roll-out)

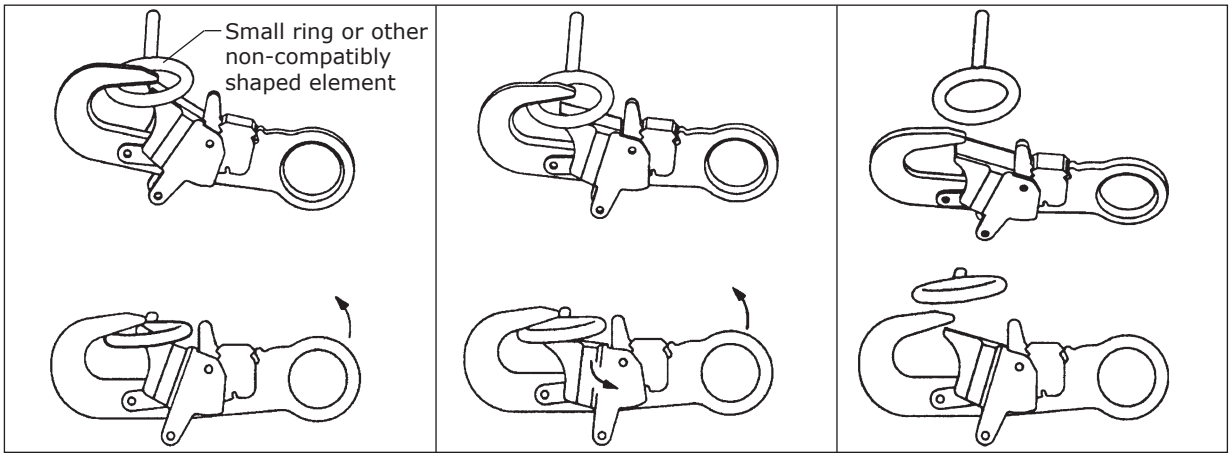

1. Force is applied to the snap hook.
2. The gate presses against the connecting ring.
3. The gate opens allowing the snap hook to slip off.

2.3 MAKING CONNECTIONS: Only use self-locking snap hooks and carabiners with this equipment. Only use connectors that are suitable to each application. Ensure all connections are compatible in size, shape and strength. Do not use equipment that is not compatible. Ensure all connectors are fully closed and locked.

DBI-SALA connectors (snap hooks and carabiners) are designed to be used only as specified in each product's user instructions. See Figure 4 for inappropriate connections. DBI-SALA snap hooks and carabiners should not be connected:

A. To a D-ring to which another connector is attached.

B. In a manner that would result in a load on the gate.

NOTE: *Large throat-opening snap hooks should not be connected to standard size D-rings or similar objects which will result in a load on the gate if the hook or D-ring twists or rotates. Large throat snap hooks are designed for use on fixed structural elements such as rebar or cross members that are not shaped in a way that can capture the gate of the hook.*

C. In a false engagement, where features that protrude from the snap hook or carabiner catch on the anchor, and without visual confirmation seems to be fully engaged to the anchor point.

D. To each other.

E. Directly to webbing or rope lanyard or tie-back (unless the manufacturer's instructions for both the lanyard and connector specifically allows such a connection).

F. To any object which is shaped or dimensioned such that the snap hook or carabiners will not close and lock, or that roll-out could occur.

2.4 ANCHORAGE STRENGTH: Structural anchorage points must be rigid, and capable of supporting at least 5,000 lbs. (22.2 kN) along the axis of the horizontal lifeline. Anchorages must also support at least 3,600 lbs. (16.0 kN) applied in all potential directions of fall arrest that are perpendicular to the axis of the horizontal lifeline. See Figure 5.

Figure 4 - Inappropriate Connections

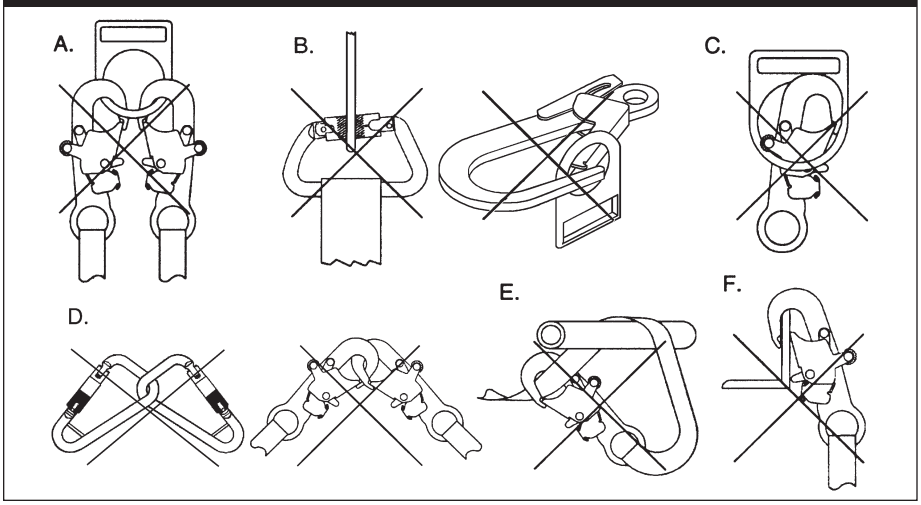

Figure 5 - Anchorage Strengths

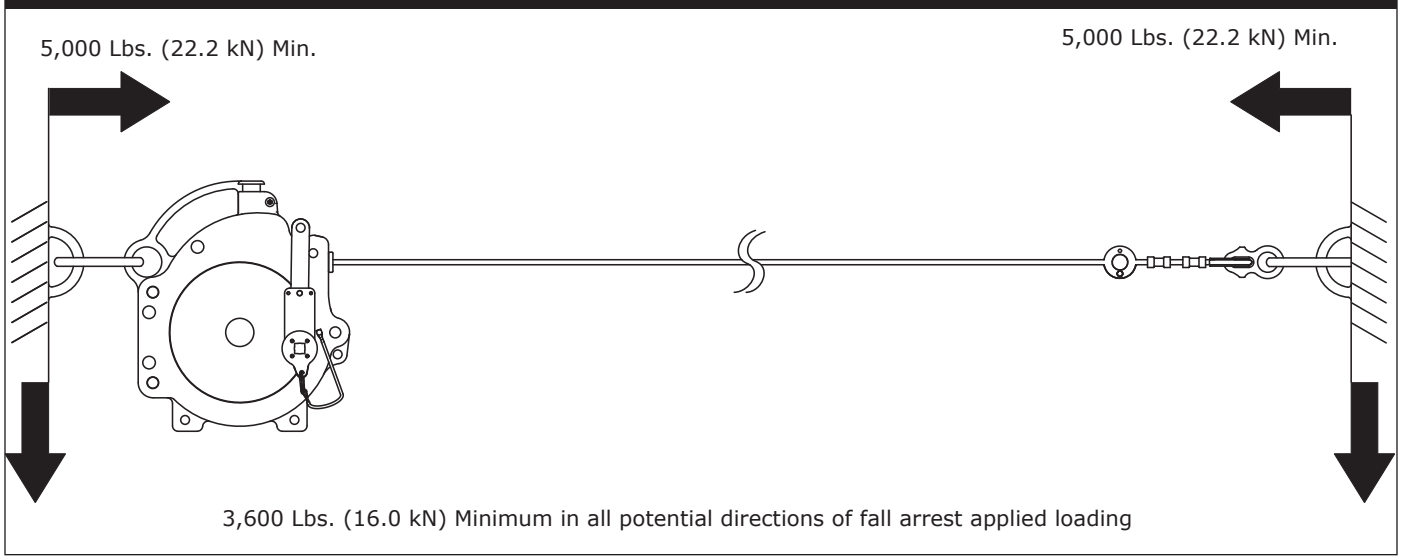

WARNING: *Anchorages must be rigid. Large deformations of the anchorage will affect system performance, and may increase the required fall clearance below the system, which could result in serious injury or death.*

2.5 CONNECTING SUBSYSTEM: The connecting subsystem is the portion of the personal fall arrest system that is used to connect between the horizontal lifeline subsystem and harness fall arrest attachment element. The connecting subsystem must limit forces applied to the horizontal lifeline to 900 lbs. (4.0 kN) or less.

3.0 OPERATION AND USE

WARNING: *Do not alter or intentionally misuse this equipment. Use caution when using this equipment around moving machinery, electrical and chemical hazards, and sharp edges.*

WARNING: *Consult your doctor if there is reason to doubt your fitness to absorb the impact from a fall arrest. Age and fitness can affect your ability to withstand fall arrest forces. Pregnant women and minors must not use this system.*

3.1 BEFORE EACH USE inspect this equipment according to steps listed in section 5.4. Do not use this equipment if inspection reveals an unsafe or defective condition. Plan your use of the fall protection system prior to exposing workers to dangerous situations. Consider all factors affecting your safety before using this system.

A. READ AND UNDERSTAND all manufacturer's instructions for each component of the personal fall arrest system. All DBI-SALA harnesses and connecting subsystems are supplied with separate user instructions. Keep all instructions for future reference.

B. Review sections 1 and 2 to ensure system limitations and other requirements have been adhered to. Review applicable information regarding system clearance criteria, and ensure changes have not been made to the system installation (i.e. length), or occurred at the job site, that could affect the required fall clearance. Do not use the system if changes are required.

3.2 SYSTEM INSTALLATION: Figure 1 shows typical horizontal lifeline system installations. When using an energy absorbing lanyard to connect to the system, the end anchorages must be located at a height which will limit the free fall to 6 ft. (1.8 m). When using a self retracting lifeline (SRL) to connect to the system, the end anchorages must be located above the user. The SRL, when fully retracted, must be above the harness attachment level. The horizontal lifeline system should be positioned at a level that will minimize free fall while allowing ease of use. The horizontal lifeline should be positioned near the work location to minimize swing fall hazards. The connecting subsystem length should be kept as short as possible to reduce the potential free fall and required clearance distance. Both anchorages must be installed at approximately the same elevation, so that the horizontal lifeline system is not sloped more than 15°.

Step 1: Determine the locations of the end anchorages and evaluate their strengths in accordance with section 2.4. Determine the span length and evaluate the required clearance using Figure 6 or 7. Figure 6 specifies minimum clearance for one or two users per span using shock absorbing lanyards. Figure 7 specifies clearance for one or two users per span using self retracting lifelines.

Figure 6 - Clearance Evaluation Using DBI-SALA Energy Absorbing Lanyards

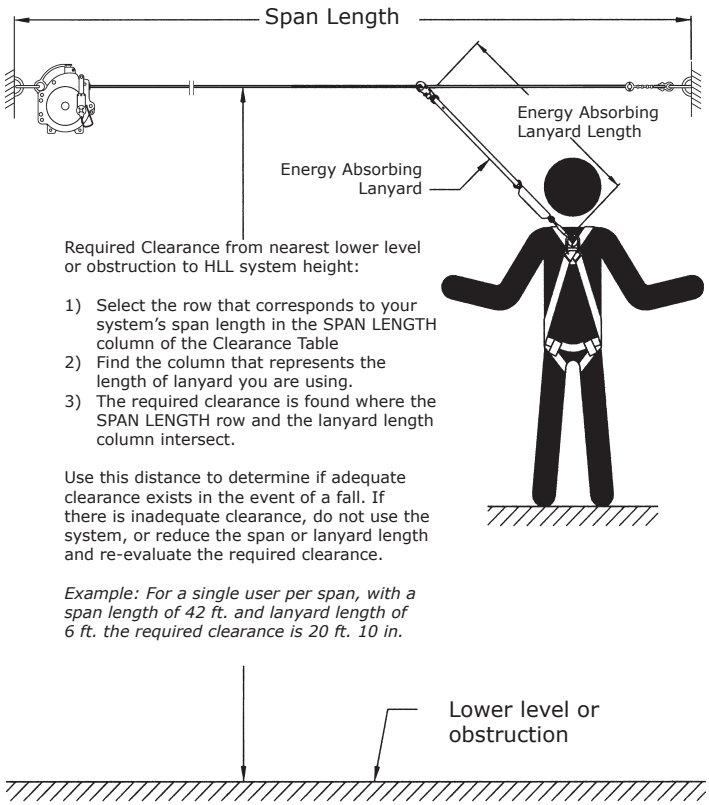

Clearance Table for One User per Span
DBI-SALA Energy Absorbing Lanyards

Span Length Dimensions in Feet (meters in paranthesis)		**Length of Energy Absorbing Lanyard** Dimensions in Ft.-In. (meters in paranthesis)			
Greater than	Less than or equal to	**3-0 (.9)**	**4-0 (1.2)**	**5-0 (1.5)**	**6-0 (1.8)**
0 (0)	10 (3.1)	15-2 (4.6)	16-2 (4.9)	17-2 (5.2)	18-2 (5.5)
10 (3.1)	20 (6.1)	15.-10 (4.8)	16-10 (5.1)	17-10 (5.4)	18-10 (5.7)
20 (6.1)	30 (9.1)	16-6 (5.0)	17-6 (5.3)	18-6 (5.6)	19-6 (5.9)
30 (9.1)	40 (12.2)	17-2 (5.2)	18-2(5.5)	19-2 (5.8)	20-2 (6.1)
40 (12.2)	50 (15.2)	17-10 (5.4)	18-10 (5.7)	19-10 (6.0)	20-10 (6.4)
50 (15.2)	60 (18.3)	18-6 (5.6)	19-6 (5.9)	20-6 (6.2)	21-6 (6.6)

Clearance Table for Two Users per Span
DBI-SALA Energy Absorbing Lanyards

Span Length Dimensions in Feet (meters in paranthesis)		**Length of Energy Absorbing Lanyard** Dimensions in Ft.-In. (meters in paranthesis)			
Greater than	Less than or equal to	**3-0 (.9)**	**4-0 (1.2)**	**5-0 (1.5)**	**6-0 (1.8)**
0 (0)	10 (3.1)	16-0 (4.9)	17-0 (5.2)	18-0 (5.5)	19-0 (5.8)
10 (3.1)	20 (6.1)	17-3 (5.3)	18-3 (5.6)	19-3 (5.9)	20-3 (6.2)
20 (6.1)	30 (9.1)	18-6 (5.6)	19-6 (5.9)	20-6 (6.2)	21-6 (6.6)
30 (9.1)	40 (12.2)	19-10 (6.0)	20-10(6.4)	21-10 (6.7)	22-10 (7.0)
40 (12.2)	50 (15.2)	21-1 (6.4)	22-1 (6.7)	23-1 (7.0)	24-1 (7.3)
50 (15.2)	60 (18.3)	22-4 (6.8)	23-4 (7.1)	24-4 (7.4)	25-4 (7.7)

Figure 7 - Clearance Evaluation Using DBI-SALA Self Retracting Lifelines

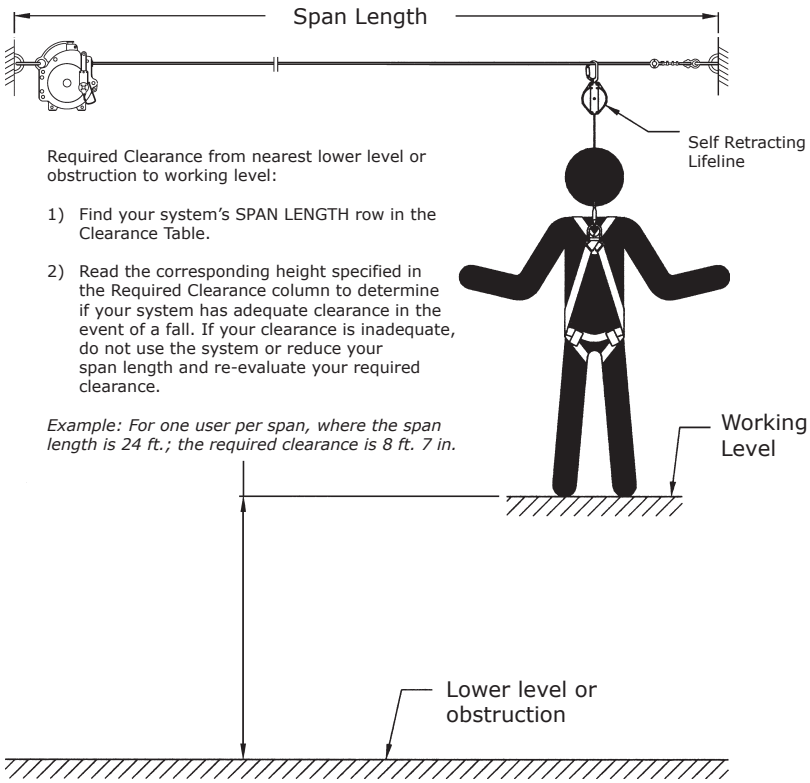

Required Clearance from nearest lower level or obstruction to working level:

1) Find your system's SPAN LENGTH row in the Clearance Table.

2) Read the corresponding height specified in the Required Clearance column to determine if your system has adequate clearance in the event of a fall. If your clearance is inadequate, do not use the system or reduce your span length and re-evaluate your required clearance.

Example: For one user per span, where the span length is 24 ft.; the required clearance is 8 ft. 7 in.

WARNING: *This information only applies when the HLL and SRL are located above the level of the harness attachment point and the user is standing.*

Clearance Table - One User Per Span
DBI-SALA Self Retracting Lifelines

Span Length Dimensions in Feet (meters in paranthesis)		Required Clearance Dimensions in Ft.-In. (meters in paranthesis)
Greater than	Less than or equal to	
0 (0)	10 (3.0)	7 ft. 5 in. (2.3)
10 (3.0)	20 (6.1)	8 ft. 0 in. (2.4)
20 (6.1)	30 (9.1)	8 ft. 7 in (2.6)
30 (9.1)	40 (12.2)	9 ft. 2 in. (2.8)
40 (12.2)	50 (15.2)	9 ft. 10 in. (3.0)
50 (15.2)	60 (18.3)	10 ft. 4 in (3.1)

Clearance Table - Two Users Per Span
DBI-SALA Self Retracting Lifelines

Span Length Dimensions in Feet (meters in paranthesis)		Required Clearance Dimensions in Ft.-In. (meters in paranthesis)
Greater than	Less than or equal to	
0 (0)	10 (3.0)	8 ft. 2 in. (2.5)
10 (3.1)	20 (6.1)	9 ft. 0 in. (2.7)
20 (6.1)	30 (9.1)	9 ft. 10 in (3.0)
30 (9.1)	40 (12.2)	10 ft. 8 in. (3.3)
40 (12.2)	50 (15.2)	11 ft. 6 in. (3.5)
50 (15.2)	60 (18.3)	12 ft. 4 in (3.8)

Step 2: Press on the button on top of the housing and hold it down to pay out the required amount of lifeline by pulling out the line. Make sure the crank handle is not connected to any output during this operation. See Figure 8. When the button is released, it will spring back up and the lifeline will lock in place. If the lifeline does not lock, do not use. The unit must be returned to an authorized dealer for service.

Step 3: Install the horizontal lifeline to anchorage connectors using the carabiners provided. See Figure 1. Refer to manufacturer's instructions provided with the anchorage connectors for installation requirements.

Step 4: Connect the crank handle to the top output and remove excess slack by rotating clockwise. The lifeline must be tensioned until a "CLICK" and a slight rotation of the crank arm relative to the crank body occur. See Figure 9. When the crank handle is released it will return to its original position in line with the crank body.

Step 5: If slack is needed to make an adjustment to the system, or for ease in removing the system, connect the crank handle to the top output and rotate clockwise for about 20°, press the top button simultaneously and allow the crank handle to rotate counterclockwise. See Figure 10.

Step 6: After use, retract the lifeline back into the casing by connecting the crank handle to the bottom output and rotating it counterclockwise. See Figure 11.

Figure 8 - Extending the Lifeline

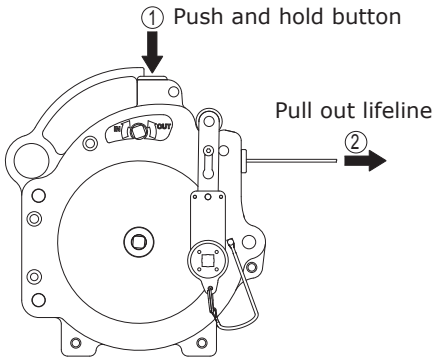

Figure 9 - Tensioning the Lifeline

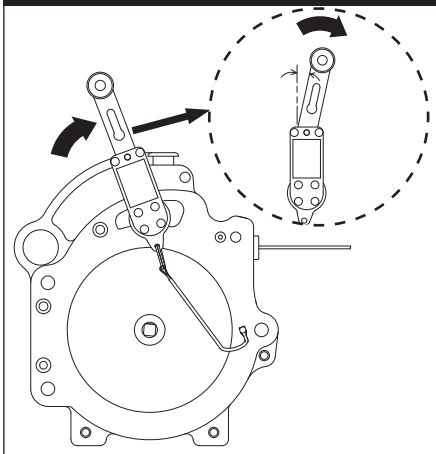

Figure 10 - Allowing Slack in the Lifeline

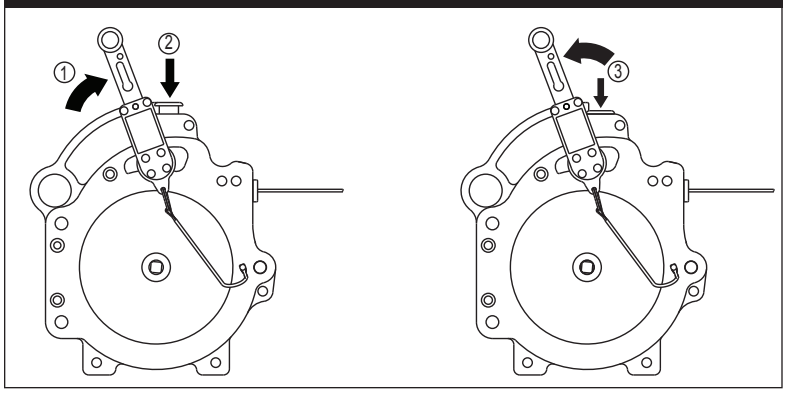

Figure 11 - Retracting the Lifeline

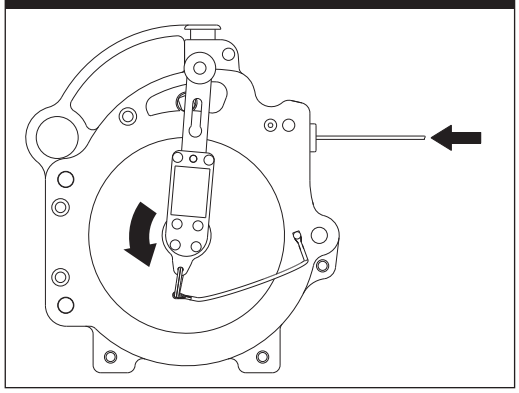

3.3 OPERATION:

A. PERSONAL FALL ARREST SYSTEM COMPONENTS: Inspect and don a full body harness according to the manufacturer's instructions. Attach the connecting subsystem (energy absorbing lanyard or SRL) to the dorsal connection on the harness.

B. CONNECTING TO THE HLL SYSTEM: Approach the work area using the appropriate access equipment. Connect the personal fall arrest system to the HLL. Connectors must meet all compatibility and strength requirements.

WARNING: *Both ends of the lifeline must be securely attached to appropriate anchors when in use. Never attach the end of the lifeline to a harness to use it in the manner of a winch or SRL.*

C. HAZARDOUS SITUATIONS: Do not take unnecessary risks, such as jumping or reaching too far from the edge of the working surface. Do not allow the connecting subsystem to pass under arms or between feet. To avoid inadequate clearance, do not climb above the HLL. To avoid swing fall hazards, do not work too far from either side of the HLL.

D. TWO PERSONS CONNECTED TO THE HLL: When a person falls while connected to the HLL, the system will deflect. If two persons are connected to the same HLL, and one person falls, the second person may be pulled off the working surface due to deflection. The potential for the second person falling increases as the HLL span length increases. The use of independent HLL systems for each person, or shorter span length, is recommended to minimize the potential of the second person falling.

E. FREE FALL: The personal fall arrest system must be rigged to limit free falls to 6 ft. (1.8 m) or less when using an energy absorbing lanyard, or such that the SRL is overhead and without slack, according to OSHA requirements.

F. SHARP EDGES: Avoid working where the connecting subsystem or other system components will be in contact with, or abrade against, unprotected sharp edges. If working around sharp edges is unavoidable, a protective cover must be used to prevent cutting of the PFAS components.

G. IN THE EVENT OF A FALL: The responsible party must have a rescue plan and the ability to implement a rescue. Tolerable suspension time in a full body harness is limited, so a prompt rescue is critical.

H. RESCUE: With the number of potential scenarios for a worker requiring rescue, an on site rescue team is beneficial. The rescue team is given the tools, both in equipment and techniques, so it can perform a successful rescue. Training should be provided on a periodic basis to ensure rescuers proficiency.

3.4 SYSTEM REMOVAL: When no longer required, the HLL system should be removed from the job site. To slacken the HLL, connect the crank to the top output and rotate clockwise for about 20°, press the top button simultaneously and allow the crank to rotate counterclockwise. Disconnect the HLL system from the anchorages. Retract the lifeline back into the housing by connecting the crank handle more likely to the bottom output and rotate counterclockwise. Ensure there are no knots or kinks in the lifeline as you retract it.

4.0 TRAINING

4.1 It is the responsibility of all users of this equipment to understand these instructions, and are trained in the correct installation, use, and maintenance of this equipment. These individuals must be aware of the consequences of improper installation or use of this equipment. This user manual is not a substitute for a comprehensive training program. Training must be provided on a periodic basis to ensure proficiency of the users.

WARNING: *Training must be conducted without exposing the trainee to a fall hazard. Training should be repeated on a periodic basis.*

5.0 INSPECTION

5.1 The i-Safe™ RFID tag on this HLL can be used in conjunction with the i-Safe handheld reading device and the web based portal to simplify inspection and inventory control and provide records for your fall protection equipment.

5.2 **BEFORE EACH INSTALLATION:** Inspect the system components according to these or other manufacturer's instructions. System components must be formally inspected by a competent person (other than the user) at least annually. Formal inspections should concentrate on visible signs of deterioration or damage to the system components. Items found to be defective must be replaced. Do not use components if inspection reveals an unsafe or defective condition. Record the results of each formal inspection in the Inspection and Maintenance log in section 9, or use the i-Safe™ inspection web portal to maintain your inspection records. If you are a first-time user, contact a Customer Service representative in the US at 800-328-6146 or in Canada at 800-387-7484 or if you have already registered, go to:www.capitalsafety.com/isafe.html. Follow instructions provided with your i-Safe handheld reader or on the web portal to transfer your data to your web log.

5.3 **INSTALLED SYSTEMS:** An inspection of the HLL system by a competent person must be completed after the system is installed. The system must be periodically inspected by a competent person when left installed for an extended period, and prior to each day's use. Periodic inspections should be performed at least monthly, or more frequently when site conditions and use warrant. Inspections of installed systems should include the inspection steps listed in section 5.4.

5.4 **BEFORE SYSTEM USE:**

Step 1. Inspect all screws, bolts and nuts. Ensure they are securely attached and tight. Check to see if any bolts, nuts or other parts are missing, or have been substituted or altered in any way. Inspect covers, housings, guards, etc. Ensure they are free of cracks, dents, or other damage.

Step 2. Inspect metal components for rust or corrosion that may affect their strength or operation.

Step 3. Inspect the wire rope for rust, corrosion, broken wires, or other obvious faults. Inspect the synthetic rope for burnt, broken threads, or other obvious faults. Inspect all carabiners and connectors securing the HLL assembly to ensure they are present and properly installed. Inspect the sleeves at the end of the lifeline for damage such as cracks, dents or distortion.

Step 4. Inspect the impact indicator at the end of the lifeline. If the pin is broken, the system has been exposed to an impact force. The system must not be used if the indicator is broken. See Figure 12.

Figure 12 - Impact Force Indicator

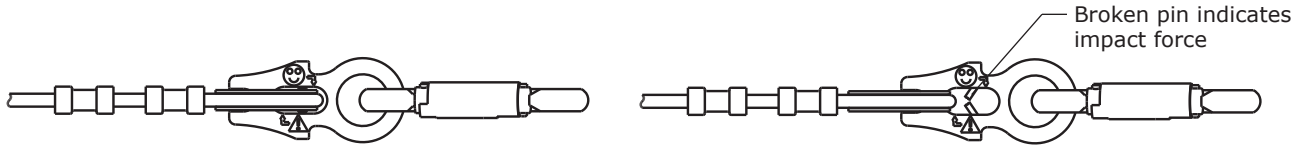

Step 5. Inspect the reserve lifeline payout. The horizontal lifeline has a 4.5 ft. (1.4 m) reserve at the end of the lifeline. If a red band attached around the rope is visible at the housing end of the lifeline, the reserve has been compromised. Remove the unit from service. The unit must be serviced by an authorized service center before reuse. See Figure 13.

Figure 13 - Extension Indicator

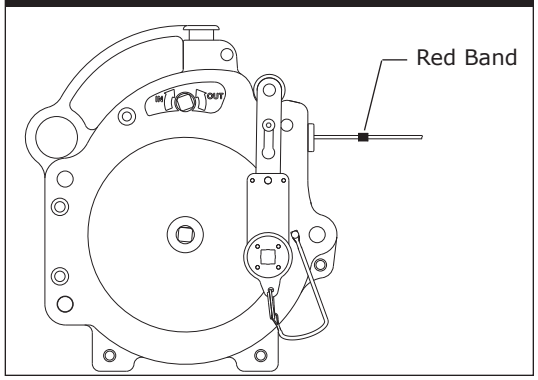

Step 6. Pull sharply on the lifeline close to the device end to ensure that the lifeline is secured.

Step 7. Repeat step 4 of section 3.2 of this manual to ensure that the lifeline is under the correct tension. If not necessary, do not apply any extra-tension on the lifeline during this operation, just make sure that the crank handle "clicks".

Step 8. Inspect system labels. The labels must be present and fully legible. See section 8. Replace labels if missing or illegible.

IMPORTANT: *If this equipment is subjected to the forces of a fall arrest, it must be removed from service and destroyed, or returned to DBI-SALA for inspection or repair.*

5.5 If inspection reveals an unsafe or defective condition, remove unit from service and destroy, or contact DBI-SALA for possible repair.

5.6 **USER EQUIPMENT:** Inspect harnesses and energy absorbing lanyards or SRL's used with the HLL system according to manufacturer's instructions.

- Annually: This equipment must be inspected according to steps listed in section 5.4 by a competent person, other than the user, at least annually. Record the results of each inspection in the inspection and maintenance log in section 9.

IMPORTANT: *Extreme working conditions (harsh environments, prolonged use, etc.) may require increasing the frequency of inspections.*

5.7 If inspection reveals an unsafe or defective condition, remove the EZ-Line™ HLL from service and contact an authorized service center for repair.

IMPORTANT: *Only DBI-SALA or an authorized service center may make repairs to this equipment.*

6.0 MAINTENANCE, SERVICING, STORAGE

6.1 Periodically clean the exterior of the unit with water and mild soap solution. Position the unit so excess water can drain out. Clean labels as required. Wipe off hardware with a clean, dry cloth.

6.2 Clean the lifeline with water and mild soap solution. Rinse and thoroughly air dry. Do not force dry with heat. An excessive buildup of dirt, paint, etc., may prevent the lifeline from fully retracting.

WARNING: *If the lifeline contacts acids, remove unit from service and wash with water and mild soap solution. Inspect unit before returning to service*

6.3 Lifeline replacement and additional maintenance and servicing procedures must be completed by an authorized service center. Authorization and a return number must be issued by DBI-SALA. Do not lubricate any parts. Do not disassemble the unit. See section 5 for inspection frequency.

6.4 Clean and store body support and associated system components according to manufacturer's instructions.

6.5 Store the unit in a cool, dry, clean environment, out of direct sunlight. Avoid areas where chemical vapors may exist. Inspect the unit after extended storage.

6.6 USER EQUIPMENT: Maintain, service, and store each piece of user equipment according to its manufacturer's instructions.

7.0 SPECIFICATIONS

7.1 MATERIALS:

Lifeline: Wire Rope, 1/4 inch diameter, 7x19 galvanized steel
Carabiners: Zinc plated high tensile alloy steel, 5,000 lbs. (22.2 kN) minimum tensile strength
Thimbles: Galvanized steel
Ferrules: Aluminum

7.2 INTERNAL ENERGY ABSORBER PERFORMANCE:

Peak Dynamic Pullout Load: 2,500 lbs. (11.1 kN)
Average Dynamic Pullout Load: 2,000 lbs. (8.9 kN)
Maximum Pullout: 4 ft. 6 in. + [60 ft. - Span length in feet] (1.4 m + [18.3 m - Span length in meters])
Minimum Tensile Strength: 5,000 lbs. (22.2 kN)
Patent Pending

8.0 LABELING

8.1 The following labels must be present and fully legible:

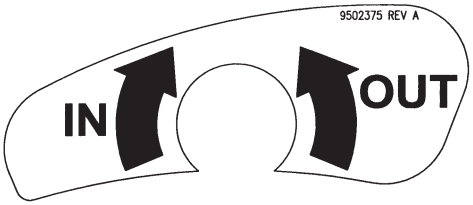

Crank Direction Label

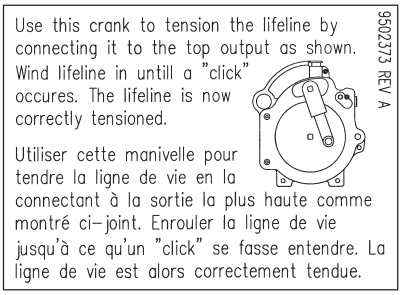

Crank Handle Label

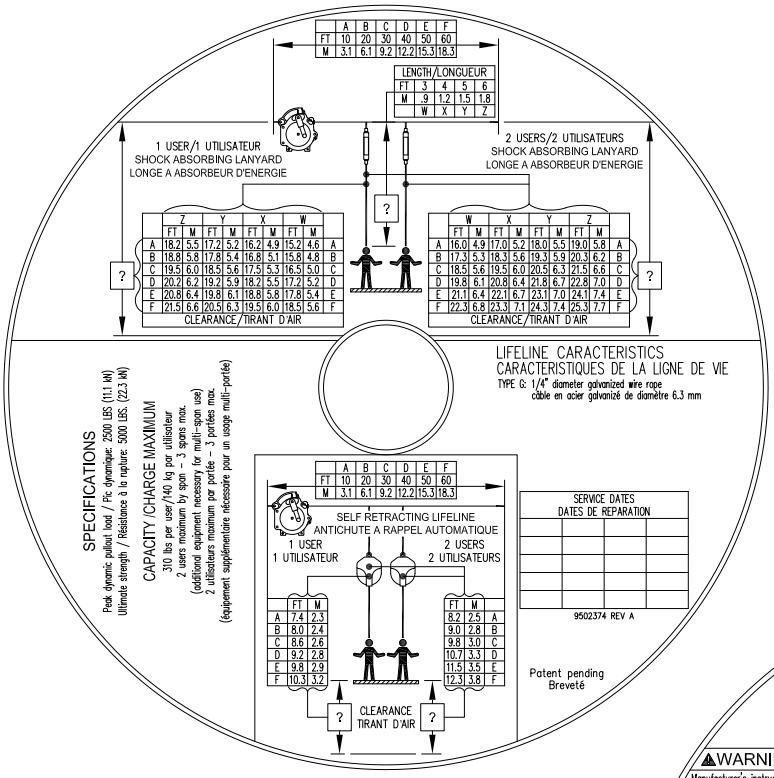

Clearance Label

Warning/Use/ID Label

9.0 INSPECTION AND MAINTENANCE LOG

SERIAL NUMBER:	
MODEL NUMBER:	
DATE PURCHASED:	**DATE OF FIRST USE:**

INSPECTION DATE	**INSPECTION ITEMS NOTED**	**CORRECTIVE ACTION**	**MAINTENANCE PERFORMED**
Approved By:			
Approved By:			
Approved By:			
Approved By:			
Approved By:			
Approved By:			
Approved By:			
Approved By:			
Approved By:			
Approved By:			
Approved By:			
Approved By:			
Approved By:			
Approved By:			
Approved By:			
Approved By:			
Approved By:			
Approved By:			

A Capital Safety Company

USA
3833 SALA Way
Red Wing, MN 55066-5005
Toll Free: 800-328-6146
Phone: (651) 388-8282
Fax: (651) 388-5065
Email: Solutions@Capitalsafety.com
www.capitalsafety.com

Canada
260 Export Boulevard
Mississauga, Ontario L5S 1Y9
Toll Free: 800-387-7484
Phone: (905) 795-9333
Fax: (905) 795-8777
Email: Solutions@capitalsafety.com
www.capitalsafety.com

This manual is available for download at www.capitalsafety.com.

Certificate No. FM 39709